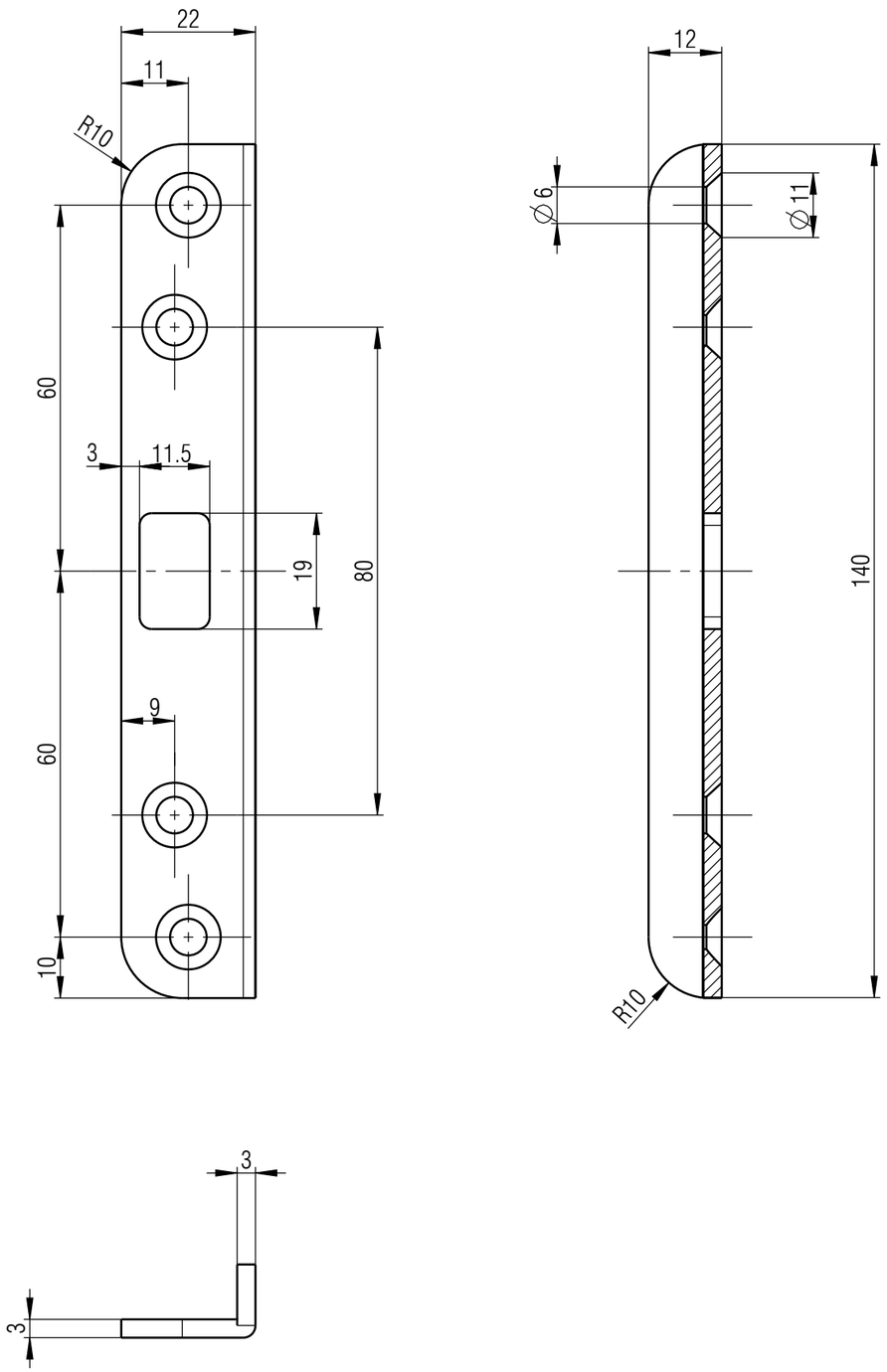


| | | |
|---|---|---|
| G-U | | |
| B_9000_0881_BD01 | | |
| Scale 1:1 | | |
| Draft | 07.06.2017 | SZ |